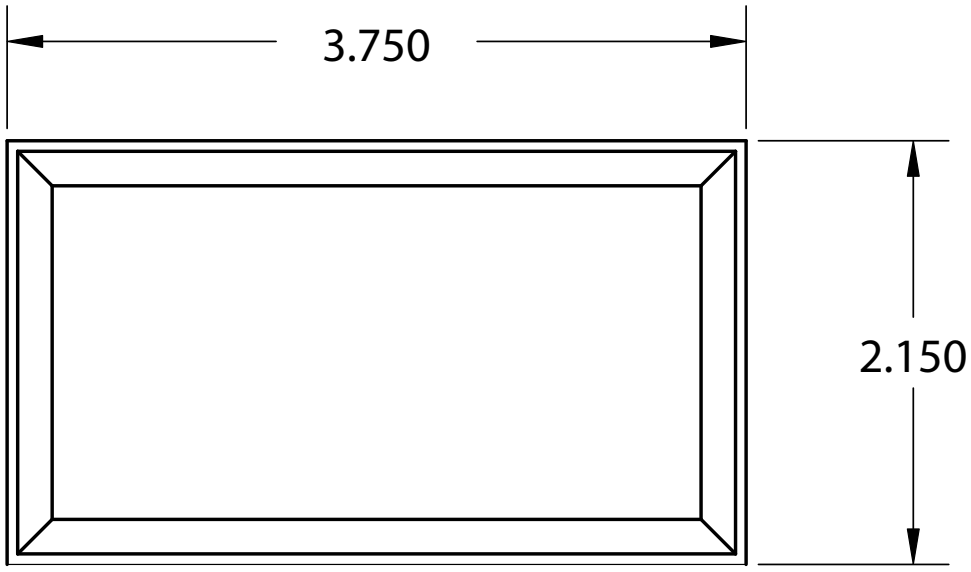
3.750
2.150

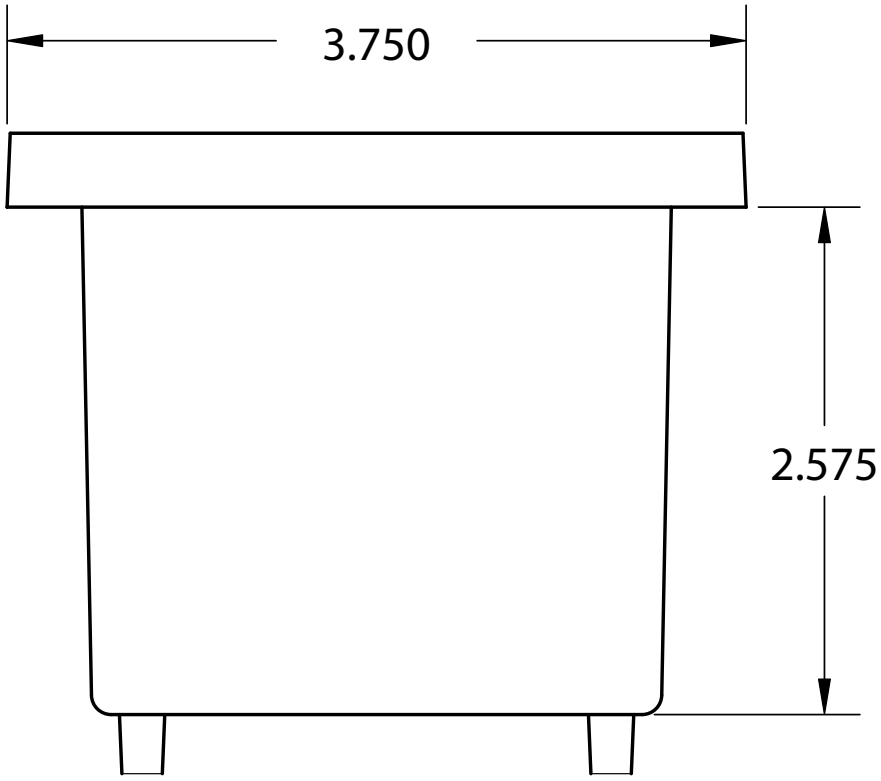
3.750
2.575

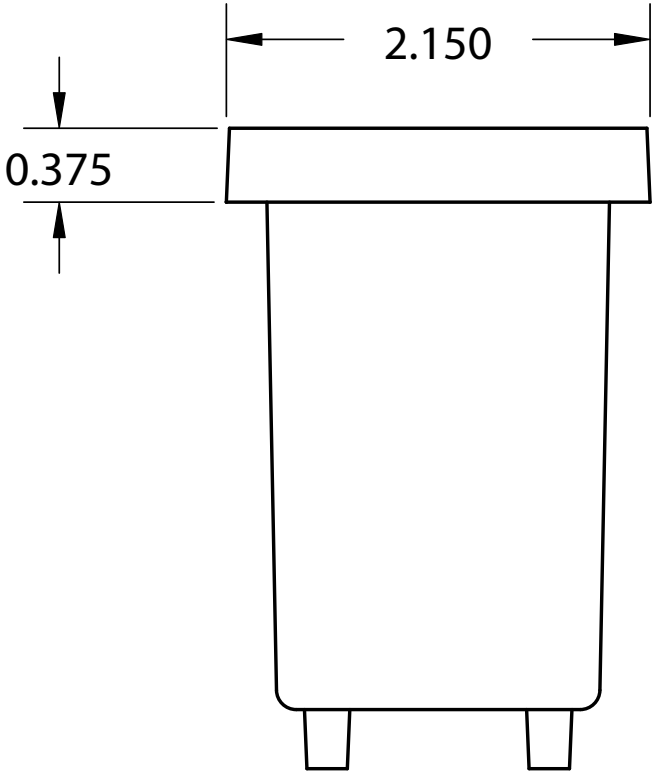
2.150
0.375