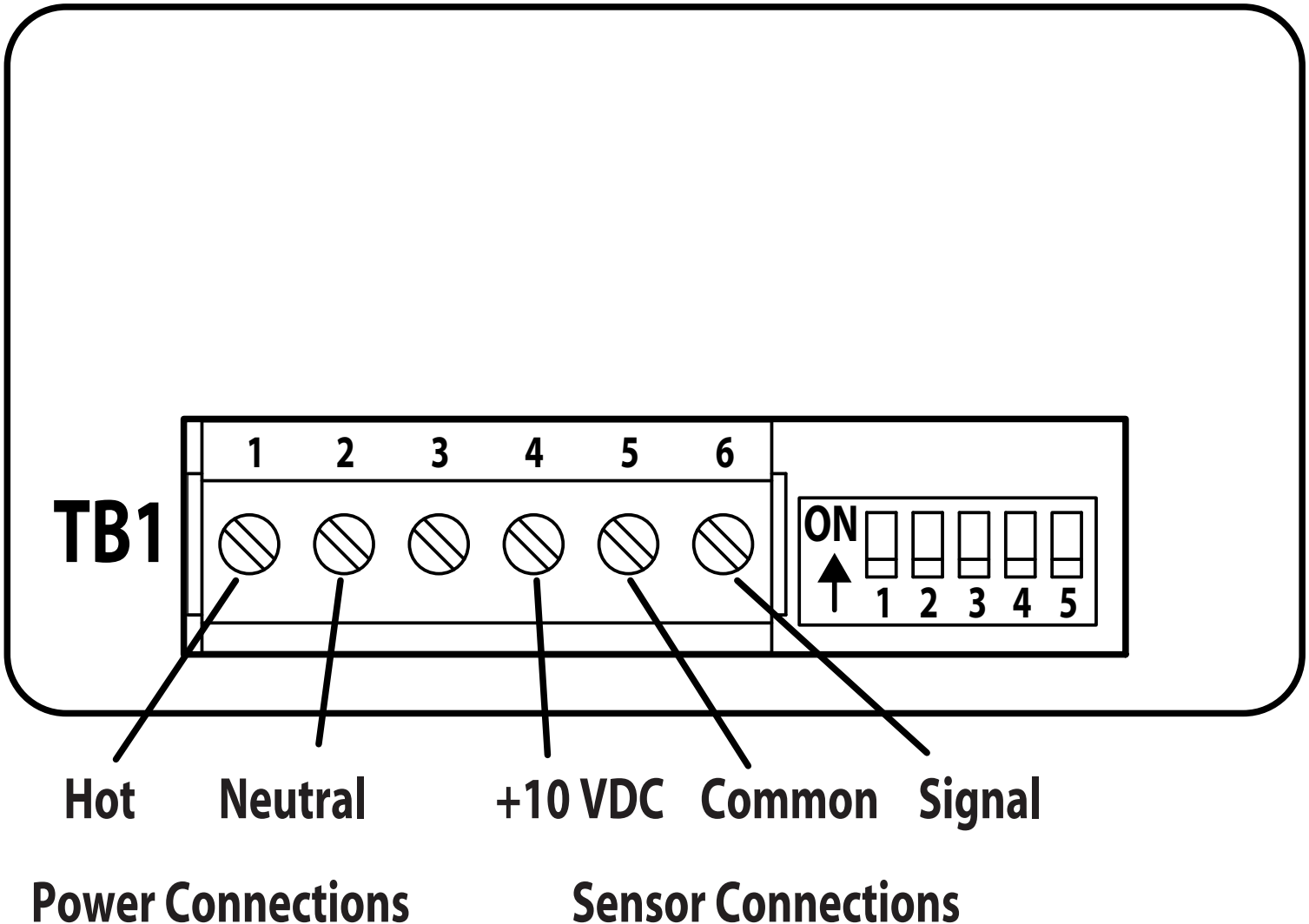
TB1
1
2
3
4
5
6
ON
1
2
3
4
5
Hot
Neutral
+10 VDC
Common
Signal
Power Connections
Sensor Connections