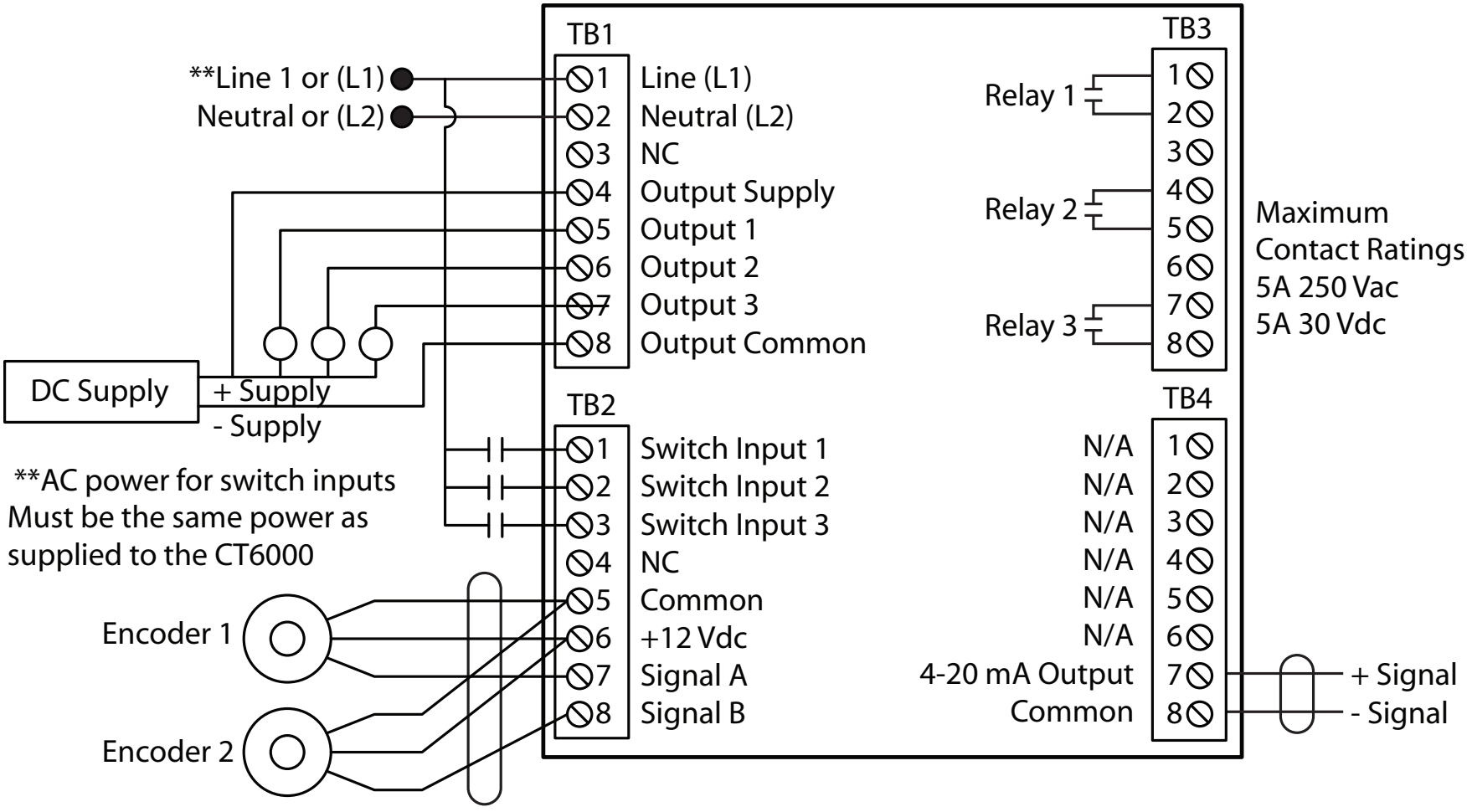
TB1
**Line 1 or (L1)
Neutral or (L2)
1 Line (L1)
2 Neutral (L2)
3 NC
4 Output Supply
5 Output 1
6 Output 2
7 Output 3
8 Output Common
TB3
Relay 1
Relay 2
Relay 3
1
2
3
4
5
6
7
8
Maximum
Contact Ratings
5A 250 Vac
5A 30 Vdc
DC Supply
+ Supply
- Supply
TB2
1 Switch Input 1
2 Switch Input 2
3 Switch Input 3
4 NC
5 Common
6 +12 Vdc
7 Signal A
8 Signal B
TB4
N/A 1
N/A 2
N/A 3
N/A 4
N/A 5
N/A 6
4-20 mA Output 7
Common 8
+ Signal
- Signal
**AC power for switch inputs
Must be the same power as
supplied to the CT6000
Encoder 1
Encoder 2