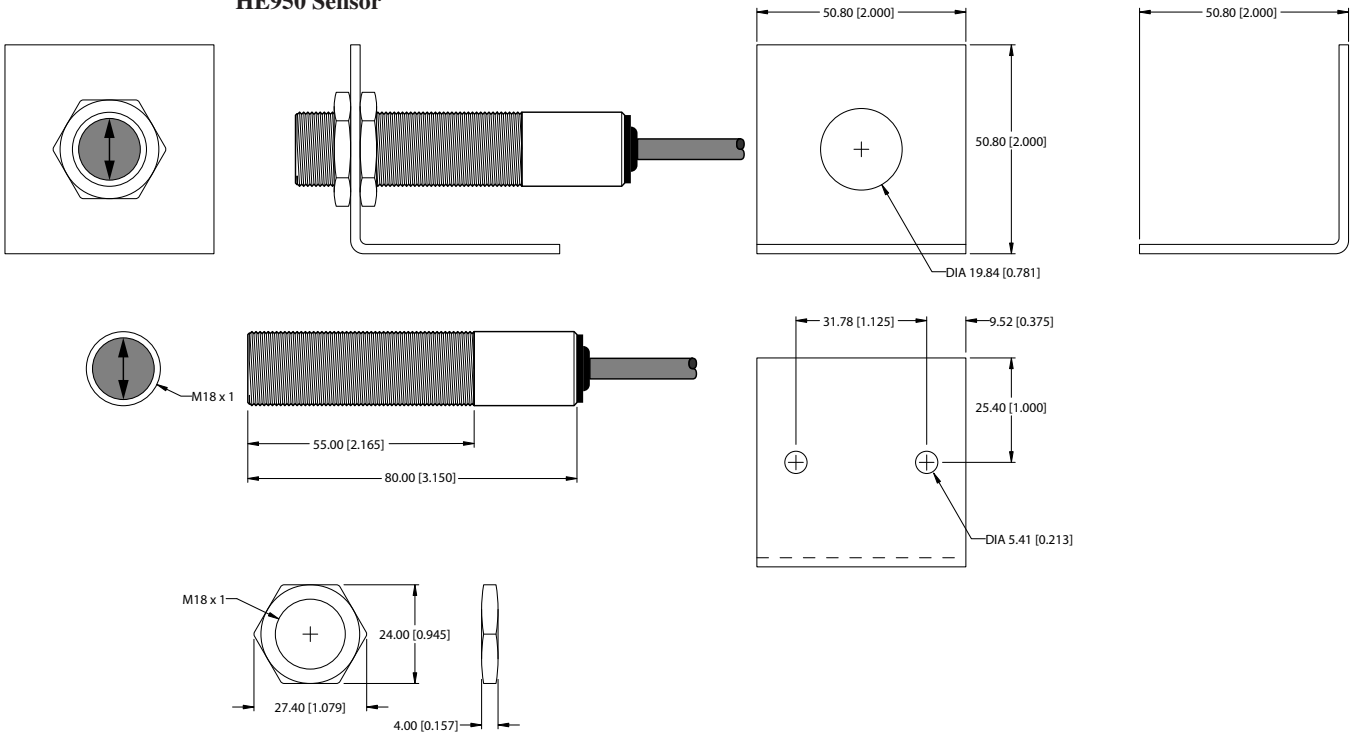HE950 Sensor