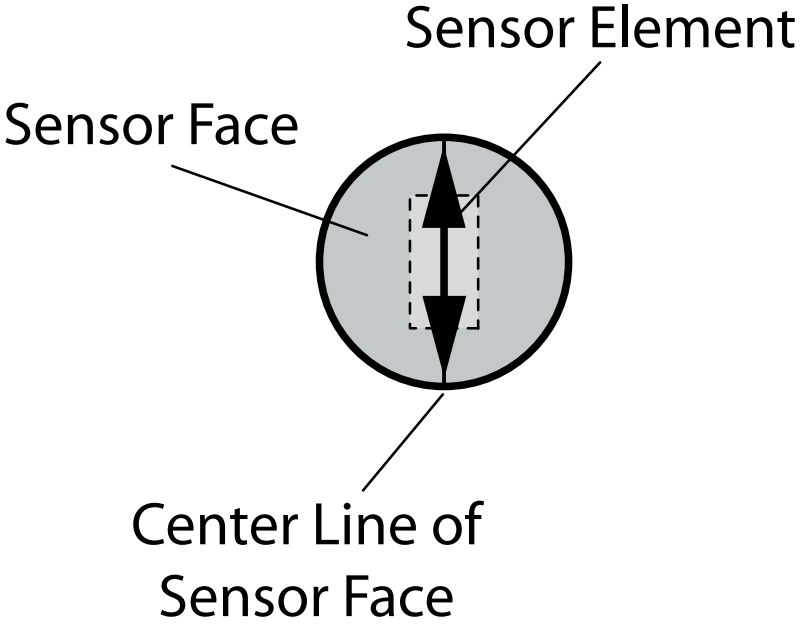
Sensor Element
Sensor Face
Center Line of
Sensor Face

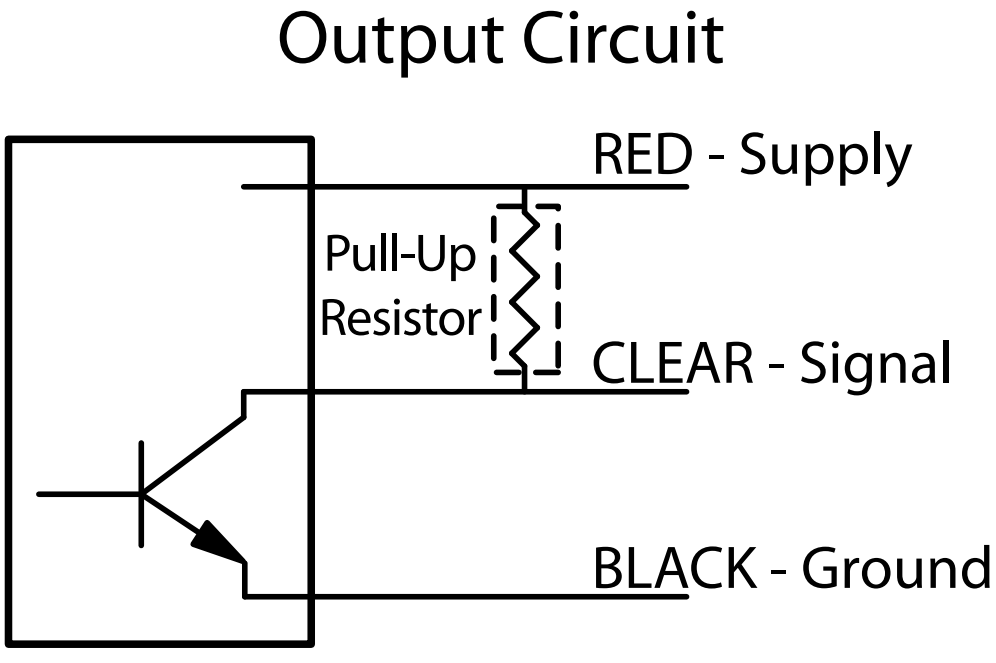
Output Circuit
RED - Supply
Pull-Up
Resistor
CLEAR - Signal
BLACK - Ground