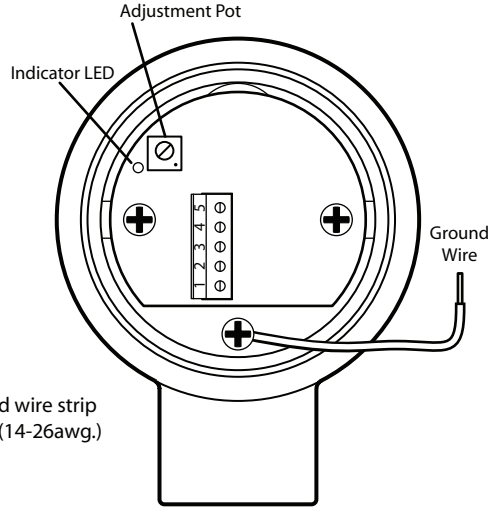
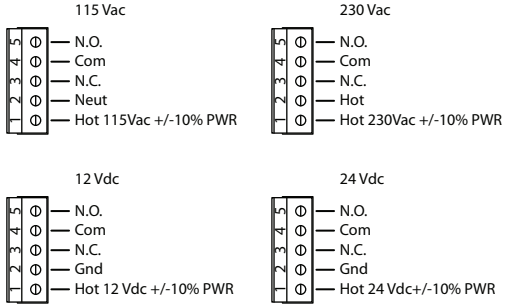
Note: Recommended wire strip length: 0.310" (14-26awg.)