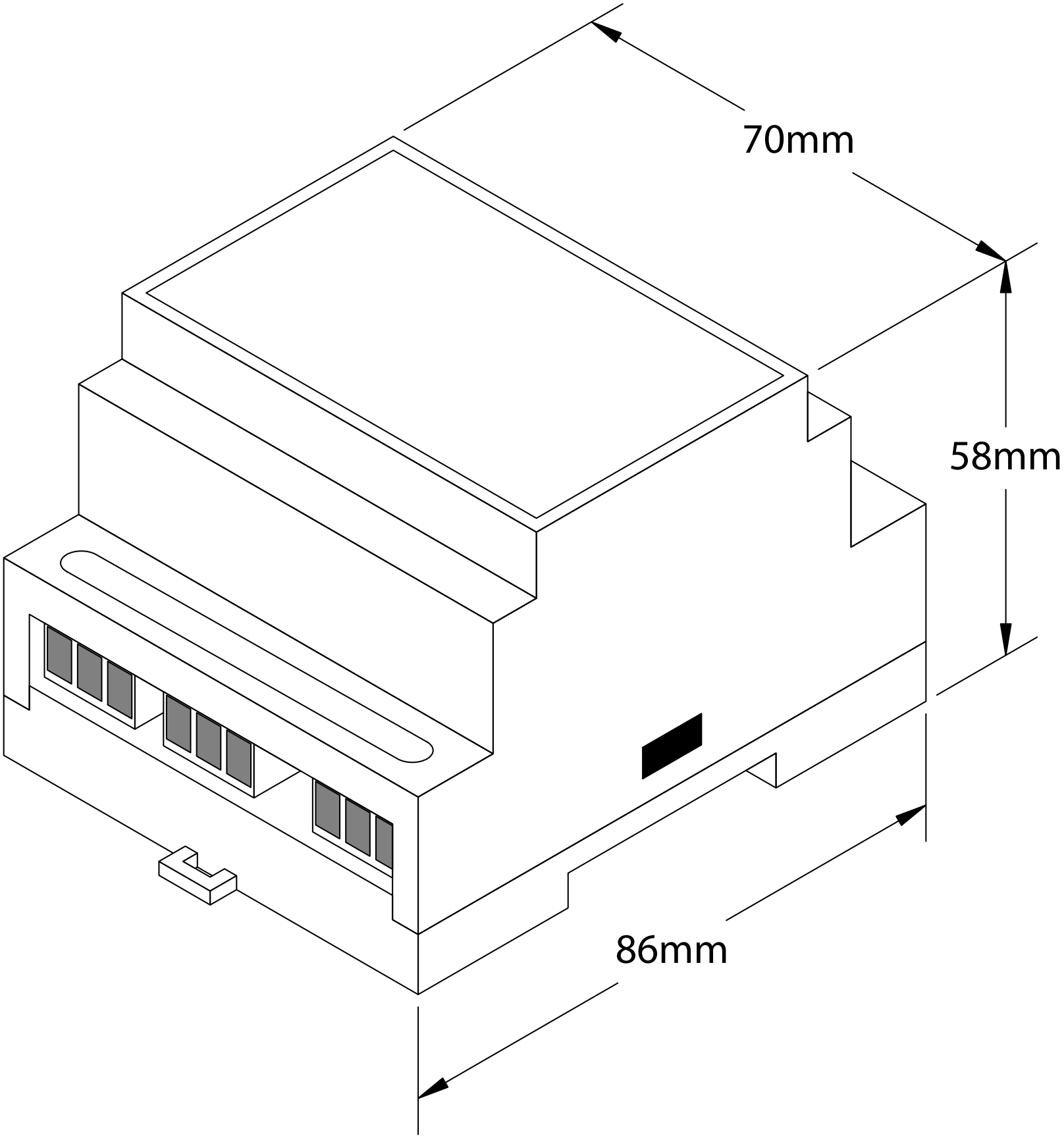
70mm
58mm
86mm