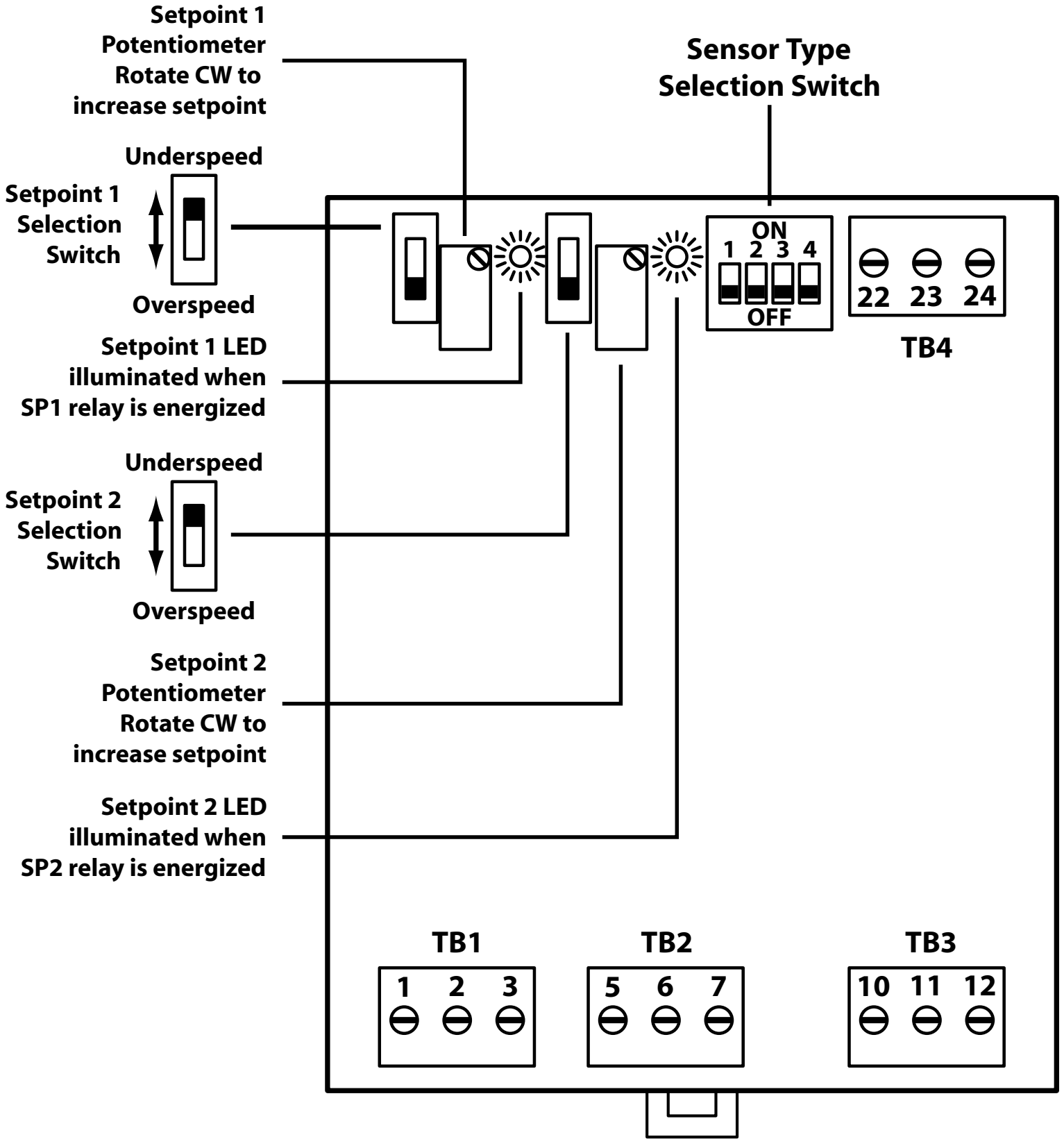
Setpoint 1
Potentiometer
Rotate CW to
increase setpoint
Sensor Type
Selection Switch
Underspeed
Setpoint 1
Selection
Switch
Overspeed
ON
1 2 3 4
OFF
22 23 24
TB4
Setpoint 1 LED
illuminated when
SP1 relay is energized
Underspeed
Setpoint 2
Selection
Switch
Overspeed
Setpoint 2
Potentiometer
Rotate CW to
increase setpoint
Setpoint 2 LED
illuminated when
SP2 relay is energized
TB1
1 2 3
TB2
5 6 7
TB3
10 11 12