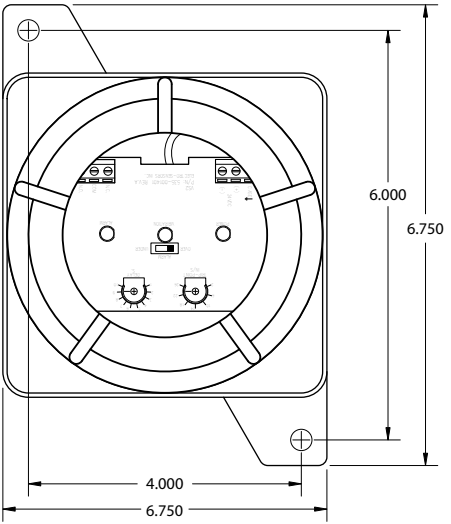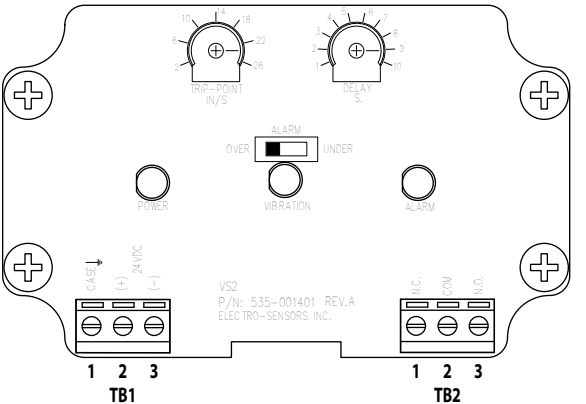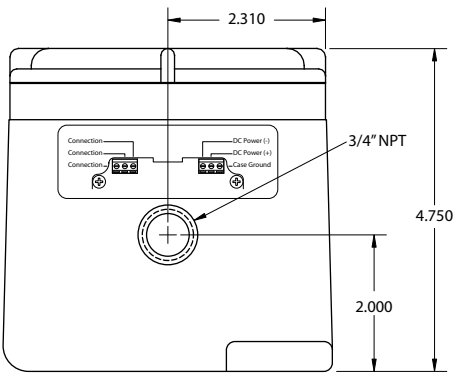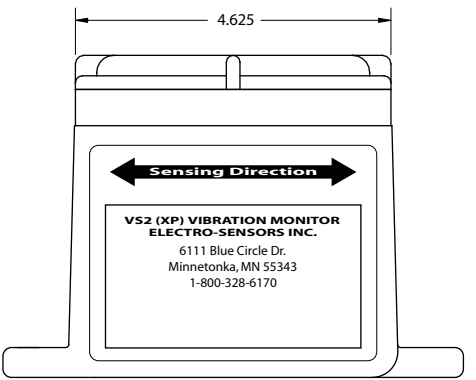Cover Attached (window cover shown)